LSS082

GU10 SURFACE SPOT



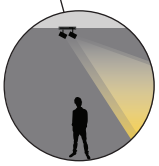

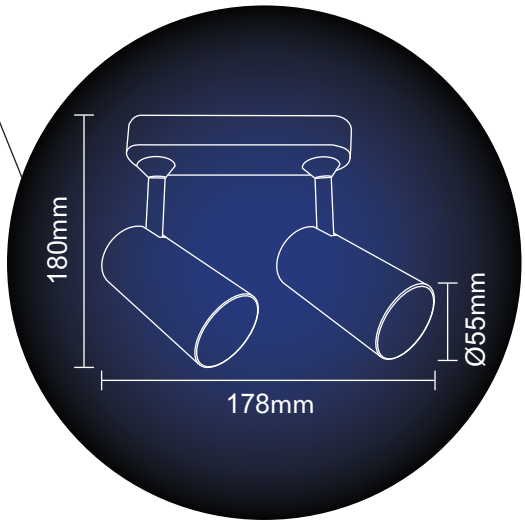

Colour: White Black

IP20

1 YRS

PHYSICAL DATA

FEATURES
- Material: Aluminium
- Not dimmable

MOUNTING
Surface

APPLICATION AREAS
Indoor, Commercial, Residential, Retail

TECHNICAL DATA	LSS082GU1030
LAMP	GU10
DIMENSIONS	L:178 x H:180 x D:Ø55mm

E&OE MAY OCCUR

Cape Town | T: +27 21 511 6116
info@lightsbylinea.com | www.lightsbylinea.com